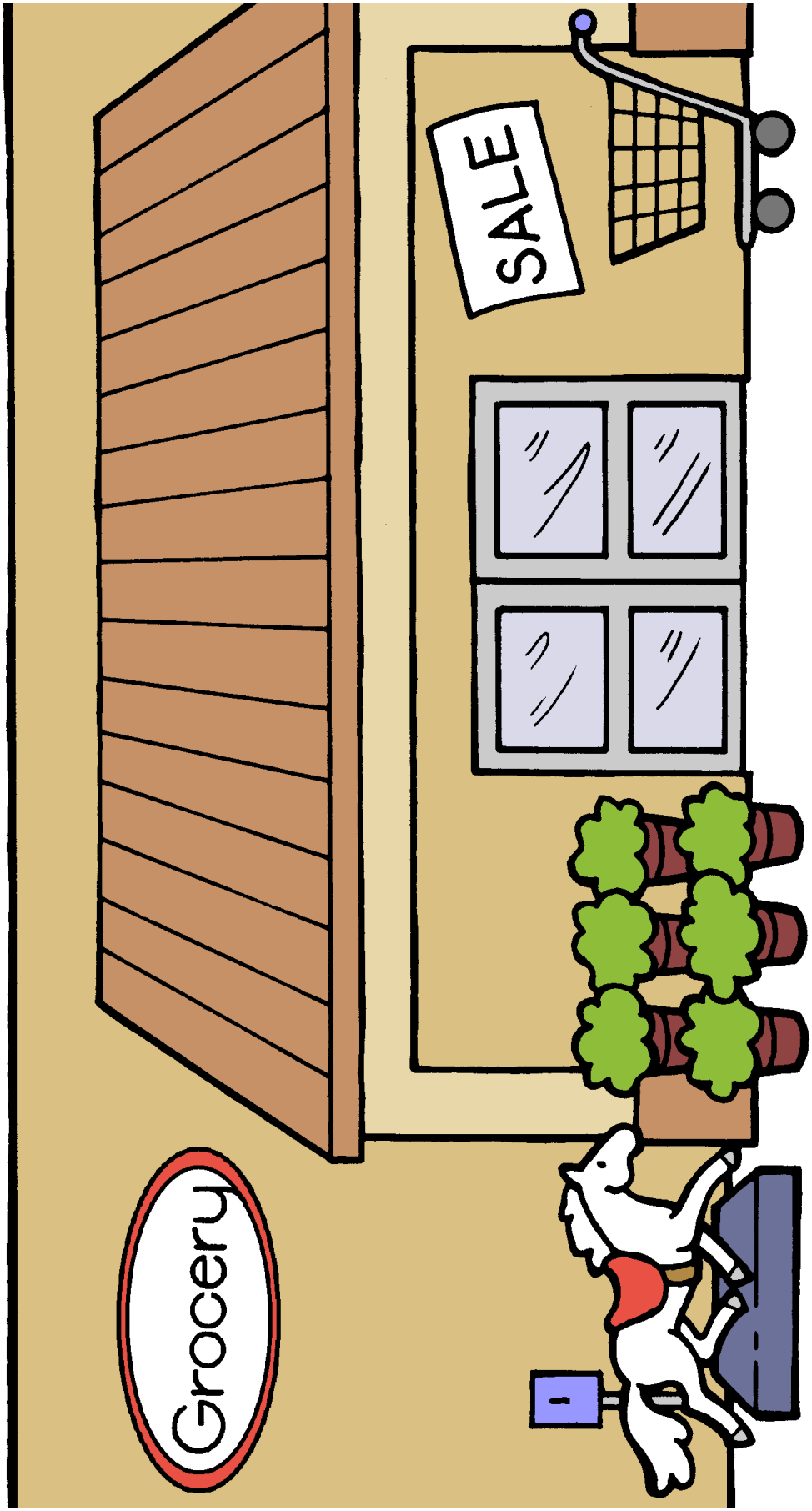

Copy on cardstock and cut on dotted line. One set per activity.
CURRICULUM FOR 2-YEAR-OLDS • ©2020 The reThink Group. All rights reserved. • www.ThinkOrange.com

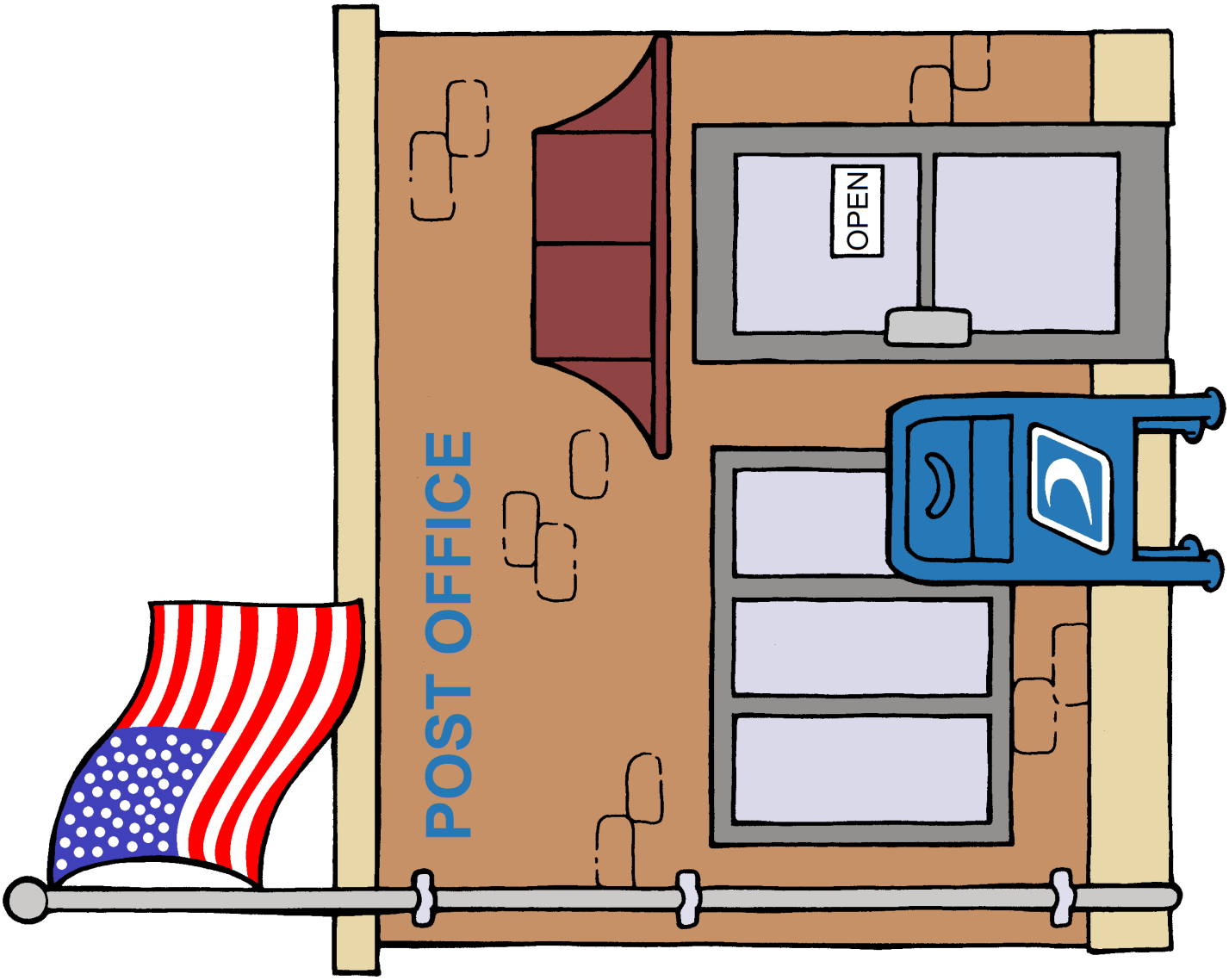

Large Places (2 of 6) • Color • *Cube Places* • April Week 4
Copy on cardstock and cut on dotted line. One set per activity.
CURRICULUM FOR 2-YEAR-OLDS • ©2020 The reThink Group. All rights reserved. • www.ThinkOrange.com

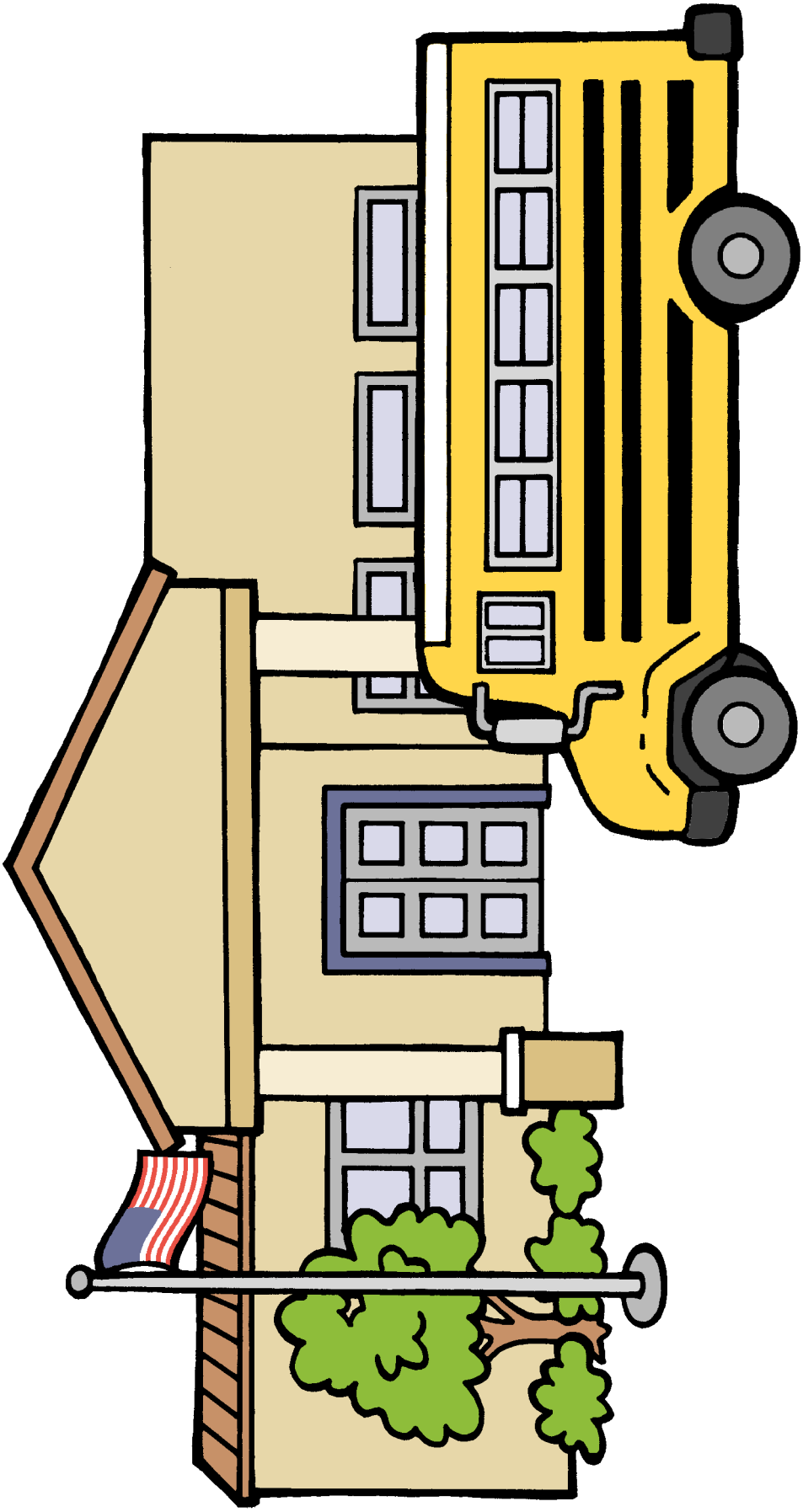

Large Places (3 of 6) • Color • *Cube Places* • April Week 4
Copy on cardstock and cut on dotted line. One set per activity.
CURRICULUM FOR 2-YEAR-OLDS • ©2020 The reThink Group. All rights reserved. • www.ThinkOrange.com

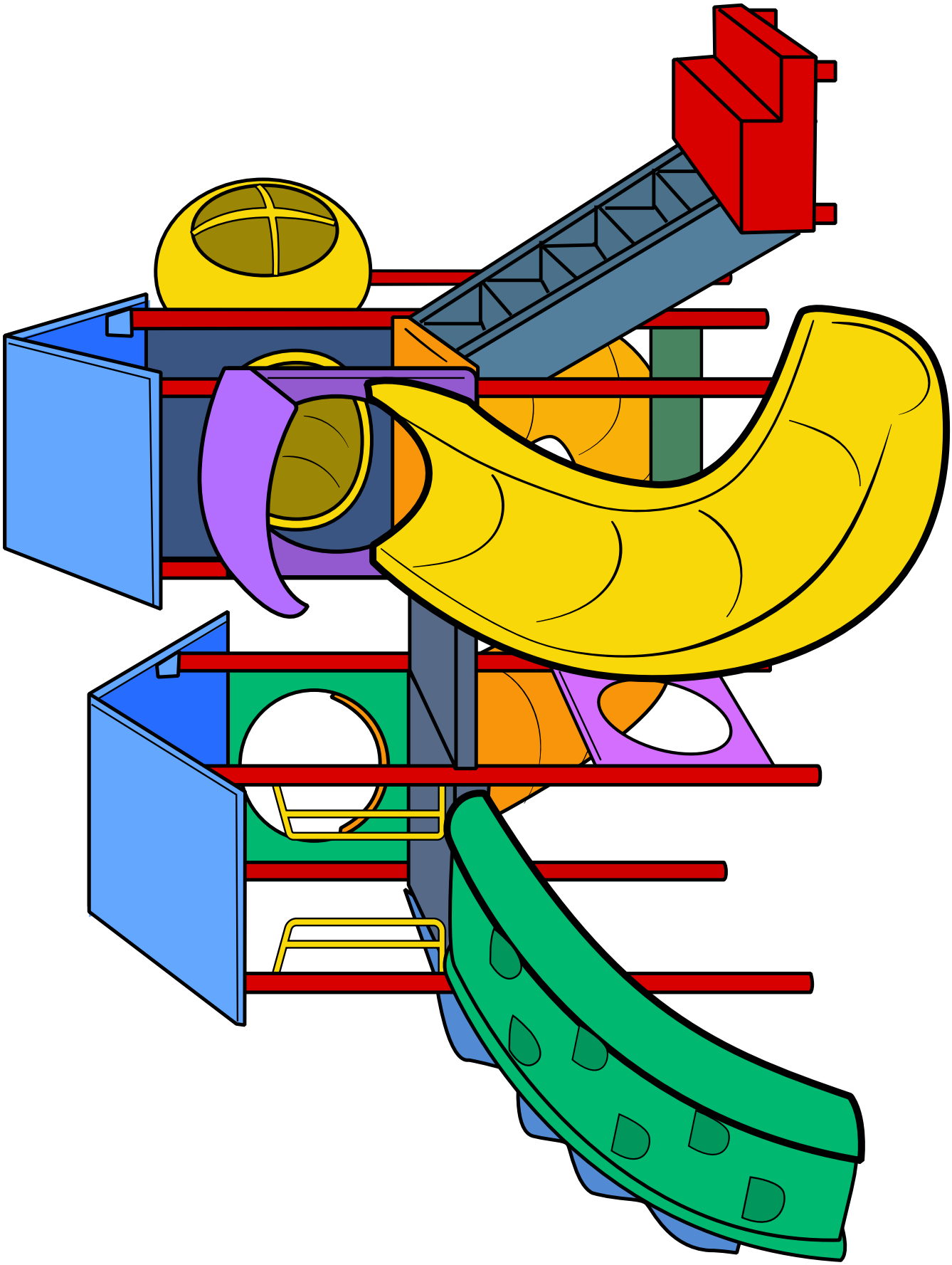

Large Places (4 of 6) • Color • *Cube Places* • April Week 4
Copy on cardstock and cut on dotted line. One set per activity.
CURRICULUM FOR 2-YEAR-OLDS • ©2020 The reThink Group. All rights reserved. • www.ThinkOrange.com

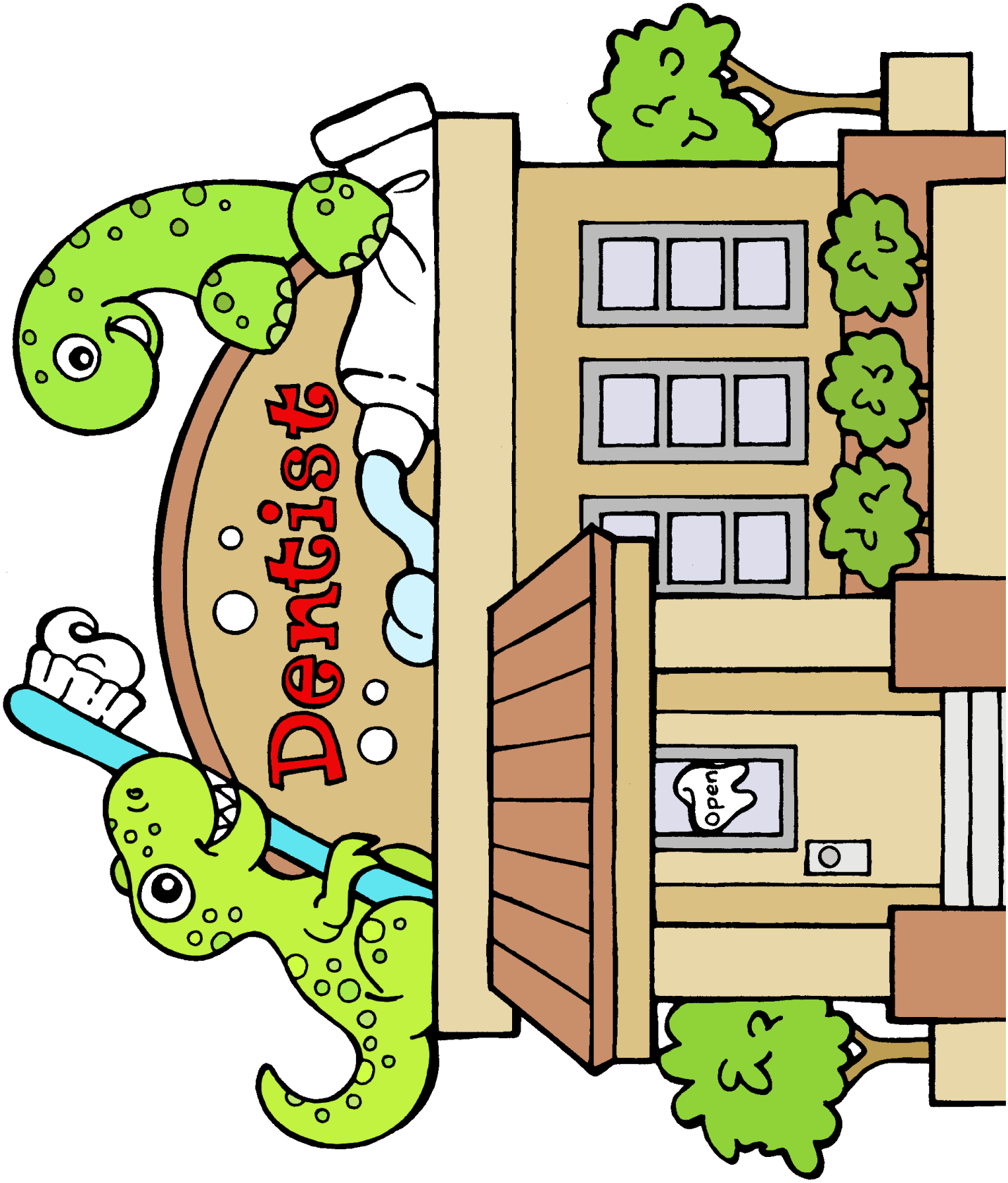

CURRICULUM FOR 2-YEAR-OLDS • ©2020 The reThink Group. All rights reserved. • www.ThinkOrange.com

Large Places (6 of 6) • Color • *Cube Places* • April Week 4
Copy on cardstock and cut on dotted line. One set per activity.
CURRICULUM FOR 2-YEAR-OLDS • ©2020 The reThink Group. All rights reserved. • www.ThinkOrange.com

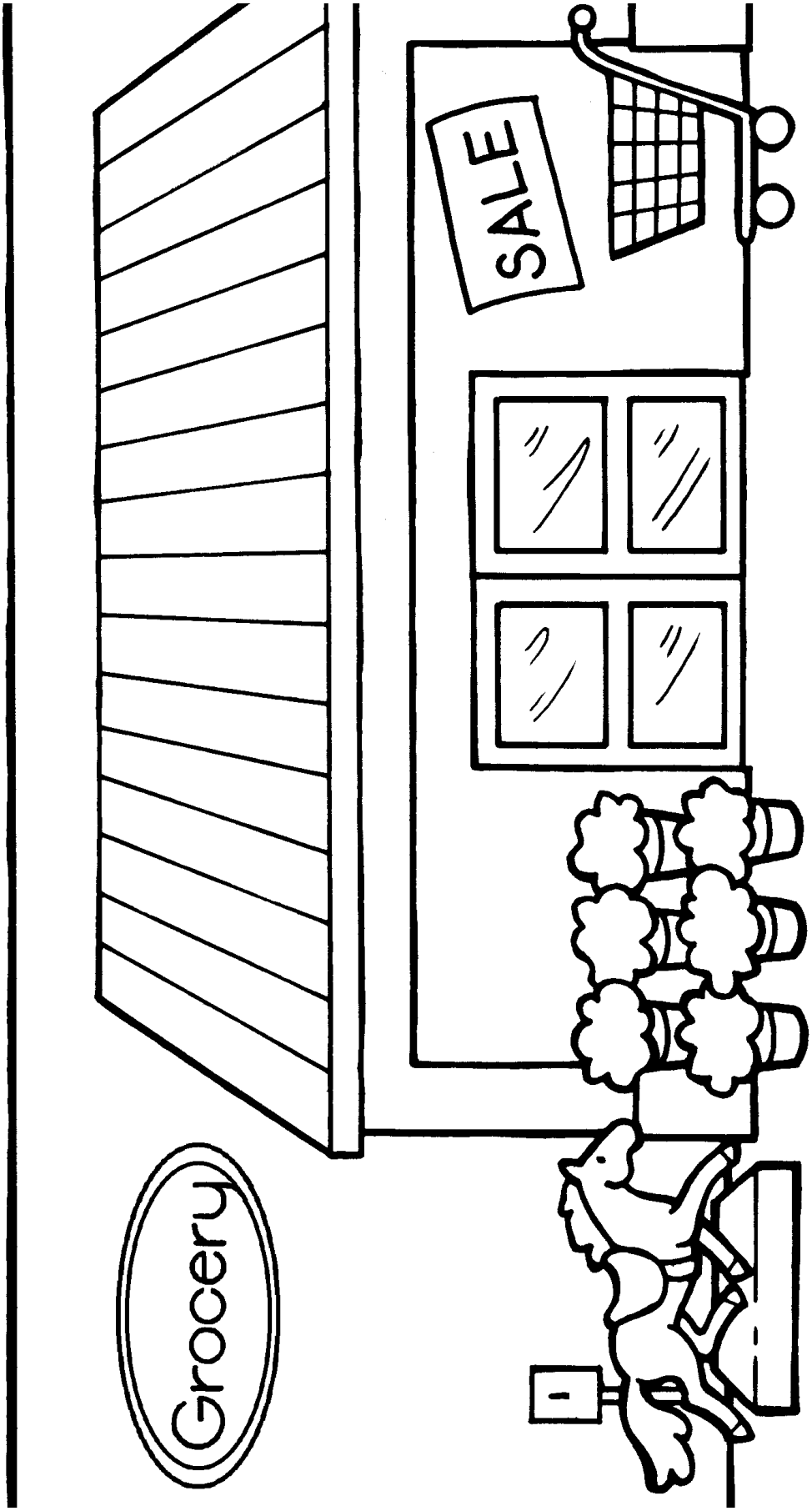

CURRICULUM FOR 2-YEAR-OLDS • ©2020 The reThink Group. All rights reserved. • www.ThinkOrange.com

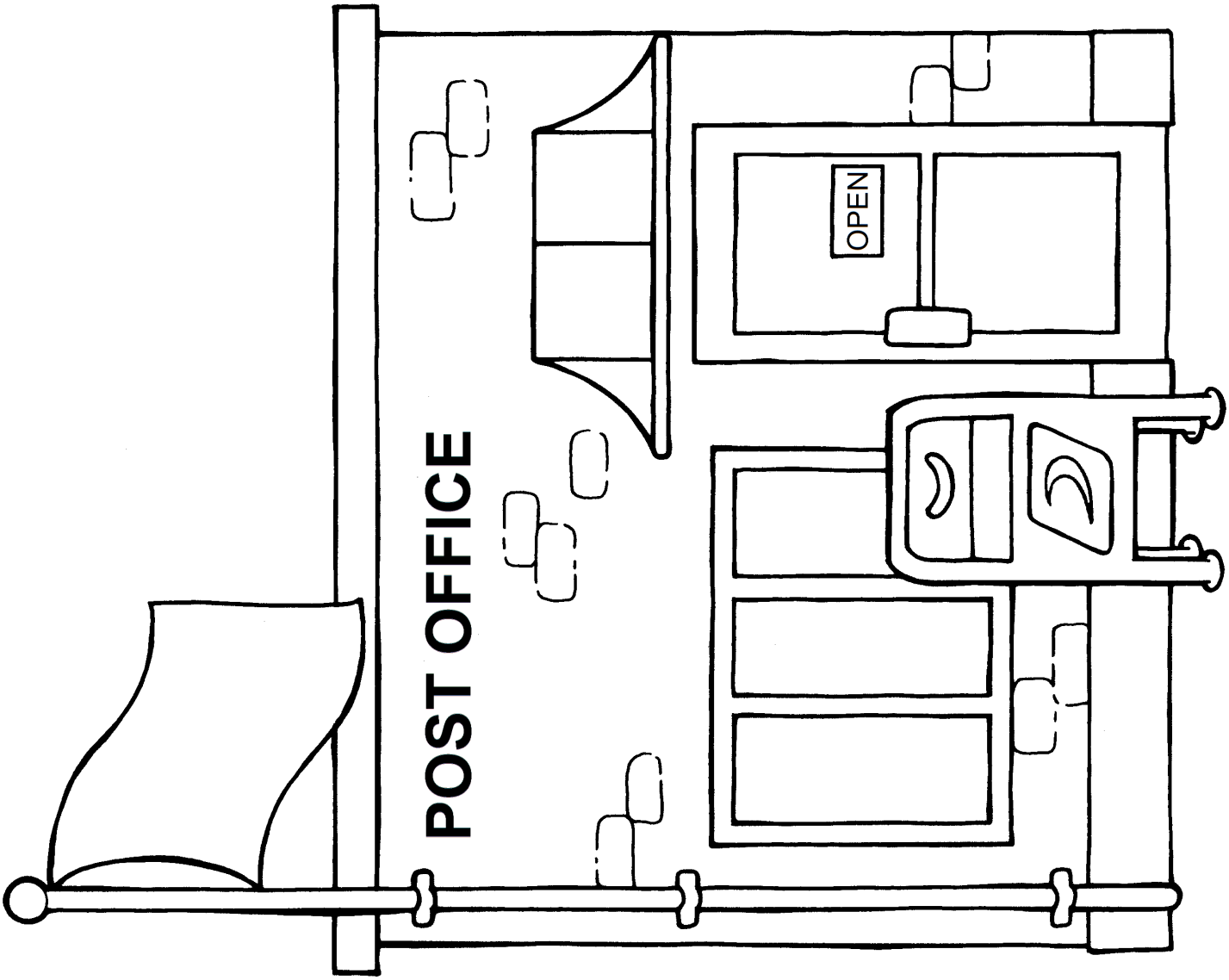

CURRICULUM FOR 2-YEAR-OLDS • ©2020 The reThink Group. All rights reserved. • www.ThinkOrange.com

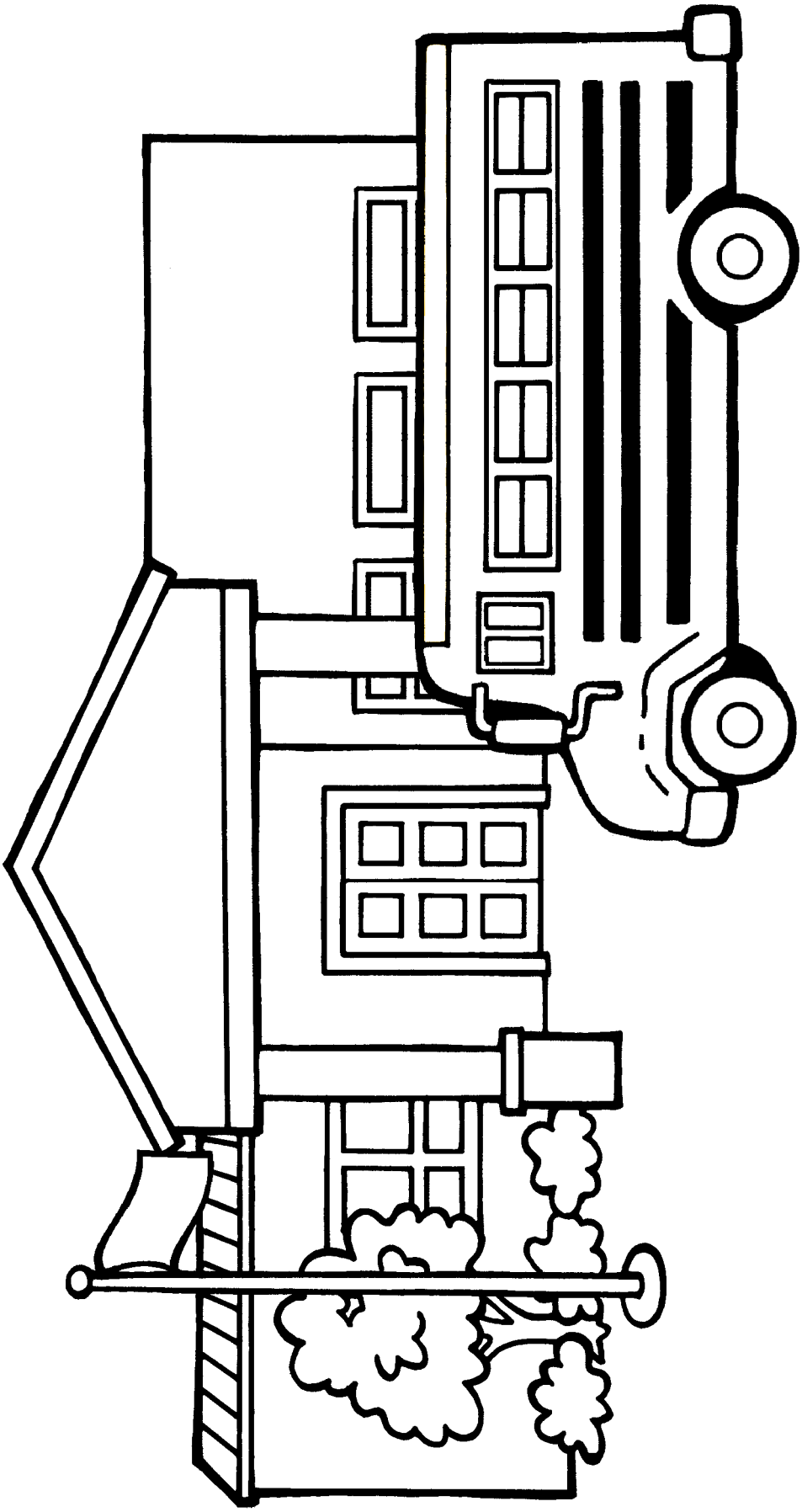

Large Places (3 of 6) • B&W • *Cube Places* • April Week 4
Copy on cardstock and cut on dotted line. One set per activity.
CURRICULUM FOR 2-YEAR-OLDS • ©2020 The reThink Group. All rights reserved. • www.ThinkOrange.com

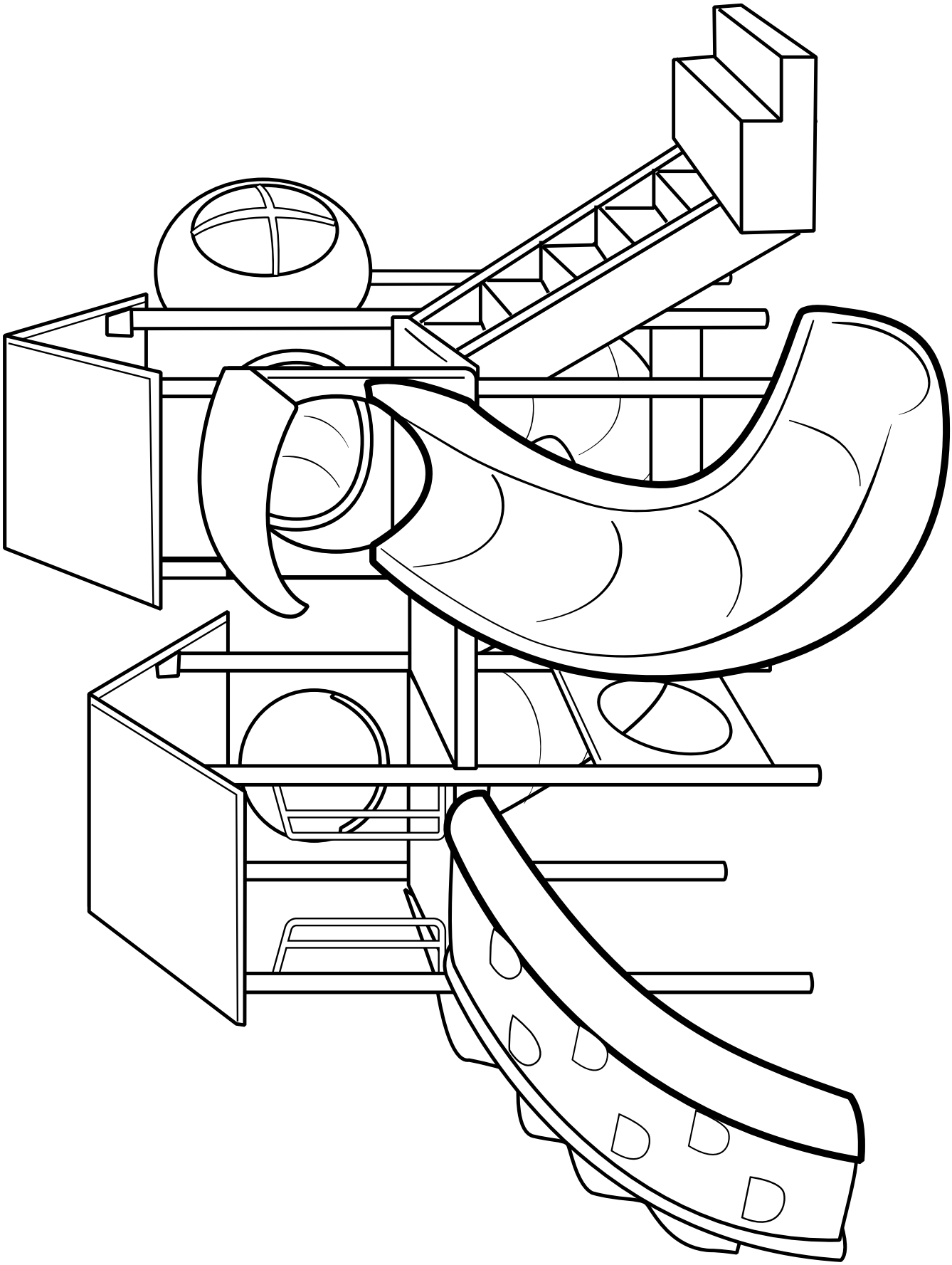

Large Places (4 of 6) • B&W • *Cube Places* • April Week 4
Copy on cardstock and cut on dotted line. One set per activity.
CURRICULUM FOR 2-YEAR-OLDS • ©2020 The reThink Group. All rights reserved. • www.ThinkOrange.com

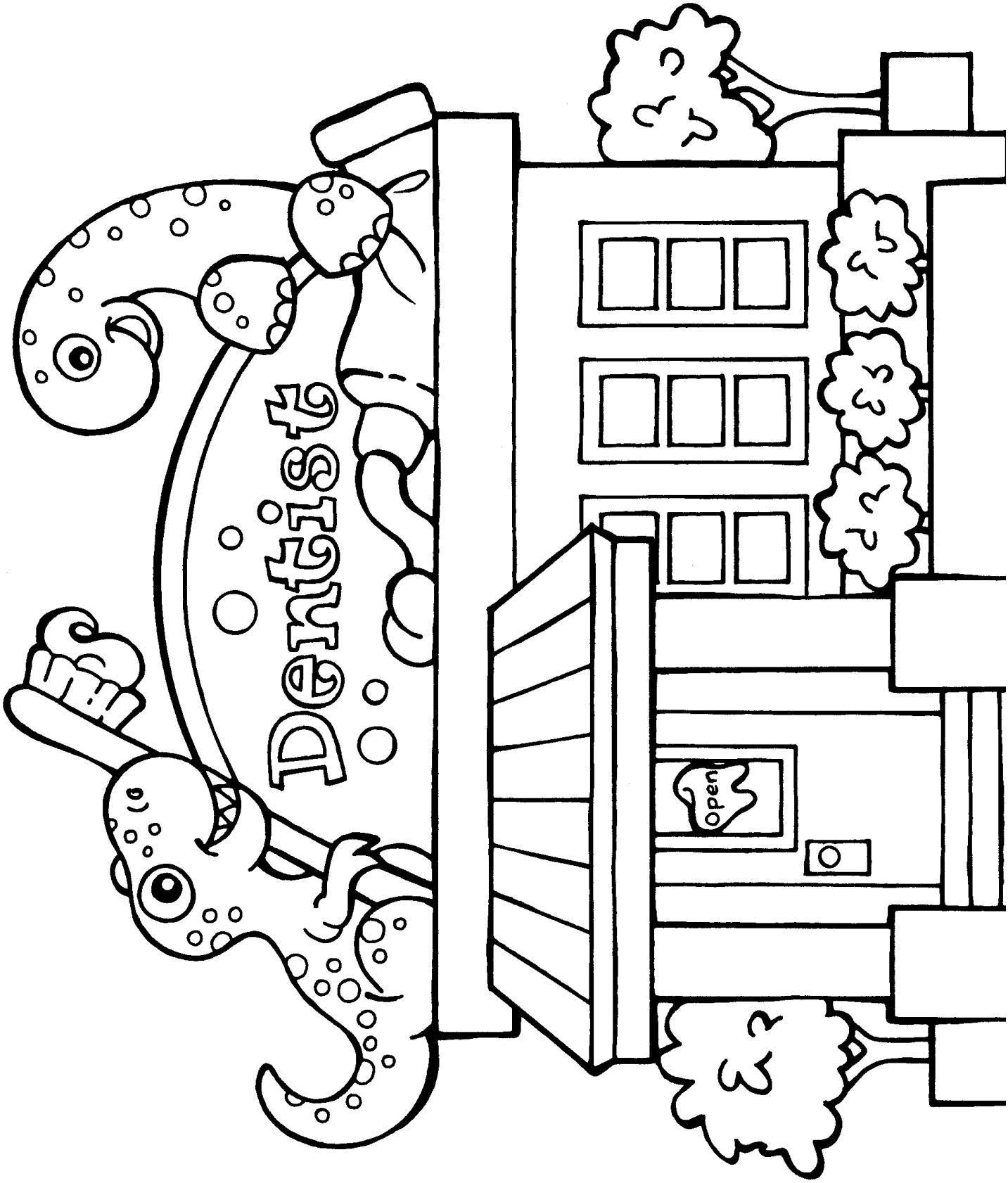

CURRICULUM FOR 2-YEAR-OLDS • ©2020 The reThink Group. All rights reserved. • www.ThinkOrange.com

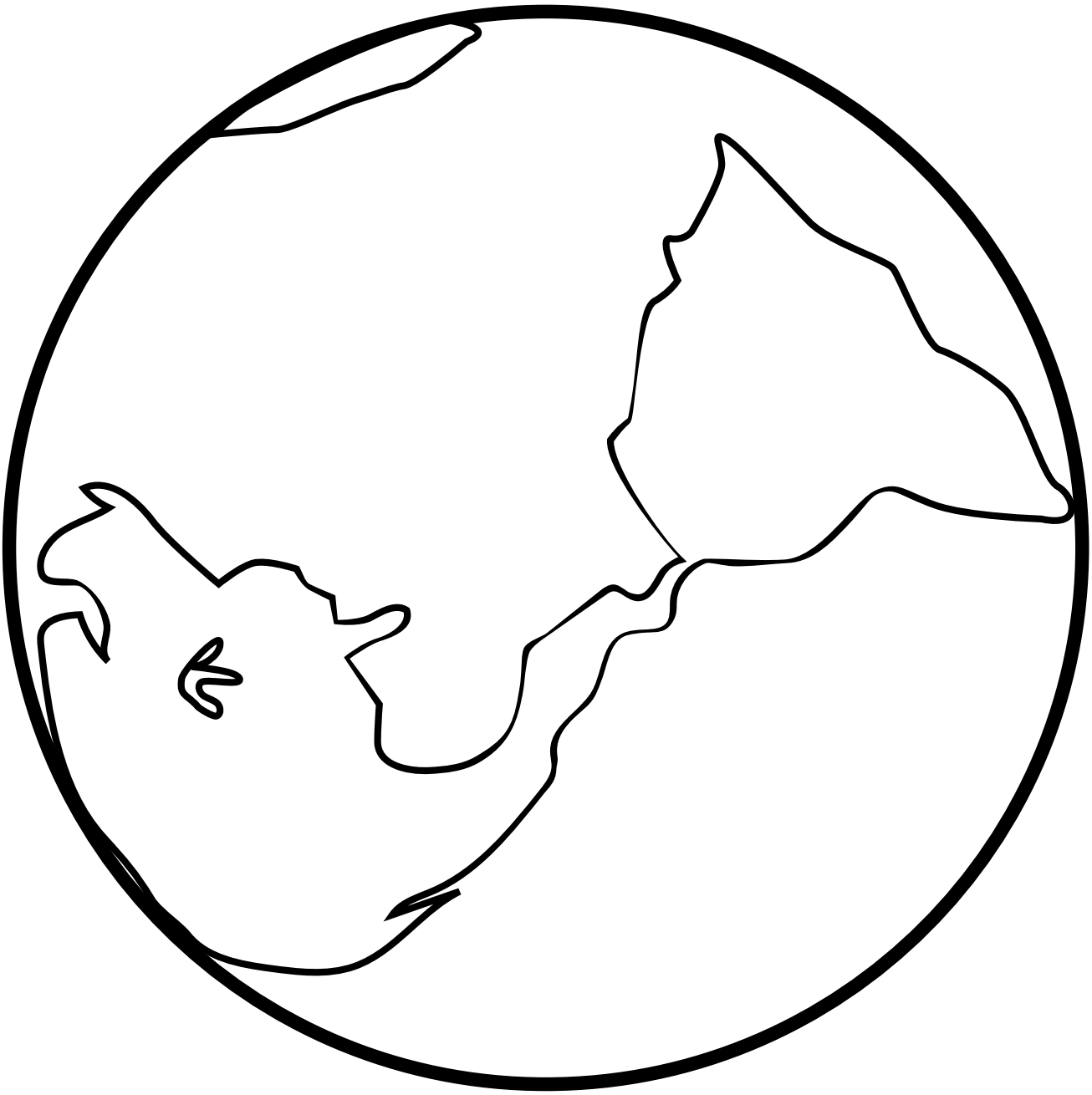

Copy on cardstock and cut on dotted line. One set per activity.
CURRICULUM FOR 2-YEAR-OLDS • ©2020 The reThink Group. All rights reserved. • www.ThinkOrange.com